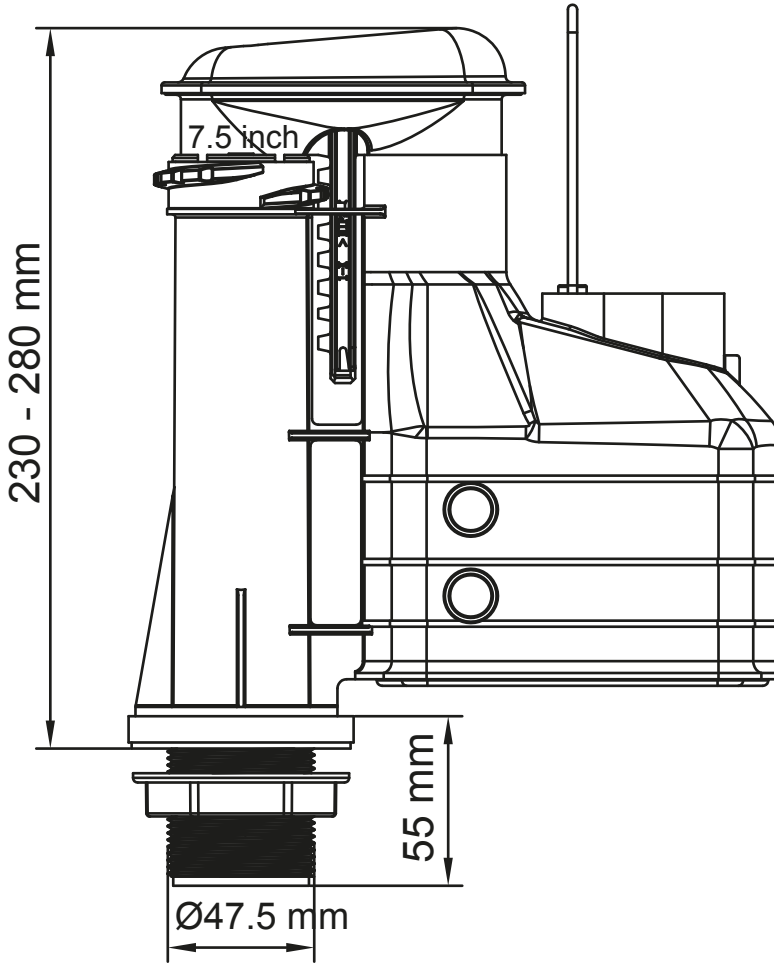
7.5 inch
230 - 280 mm
55 mm
Ø47.5 mm

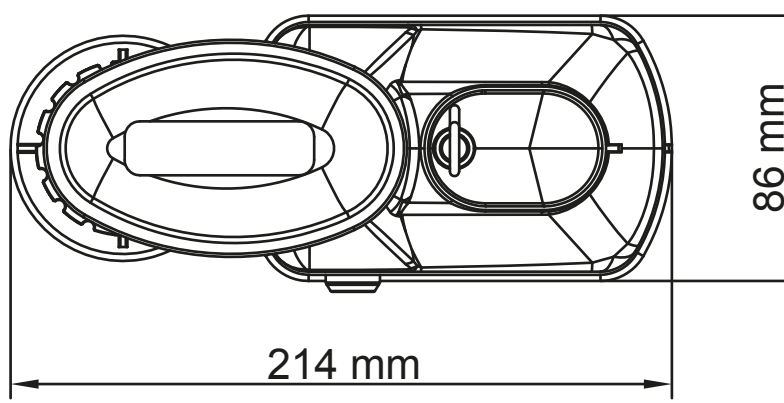
86 mm
214 mm