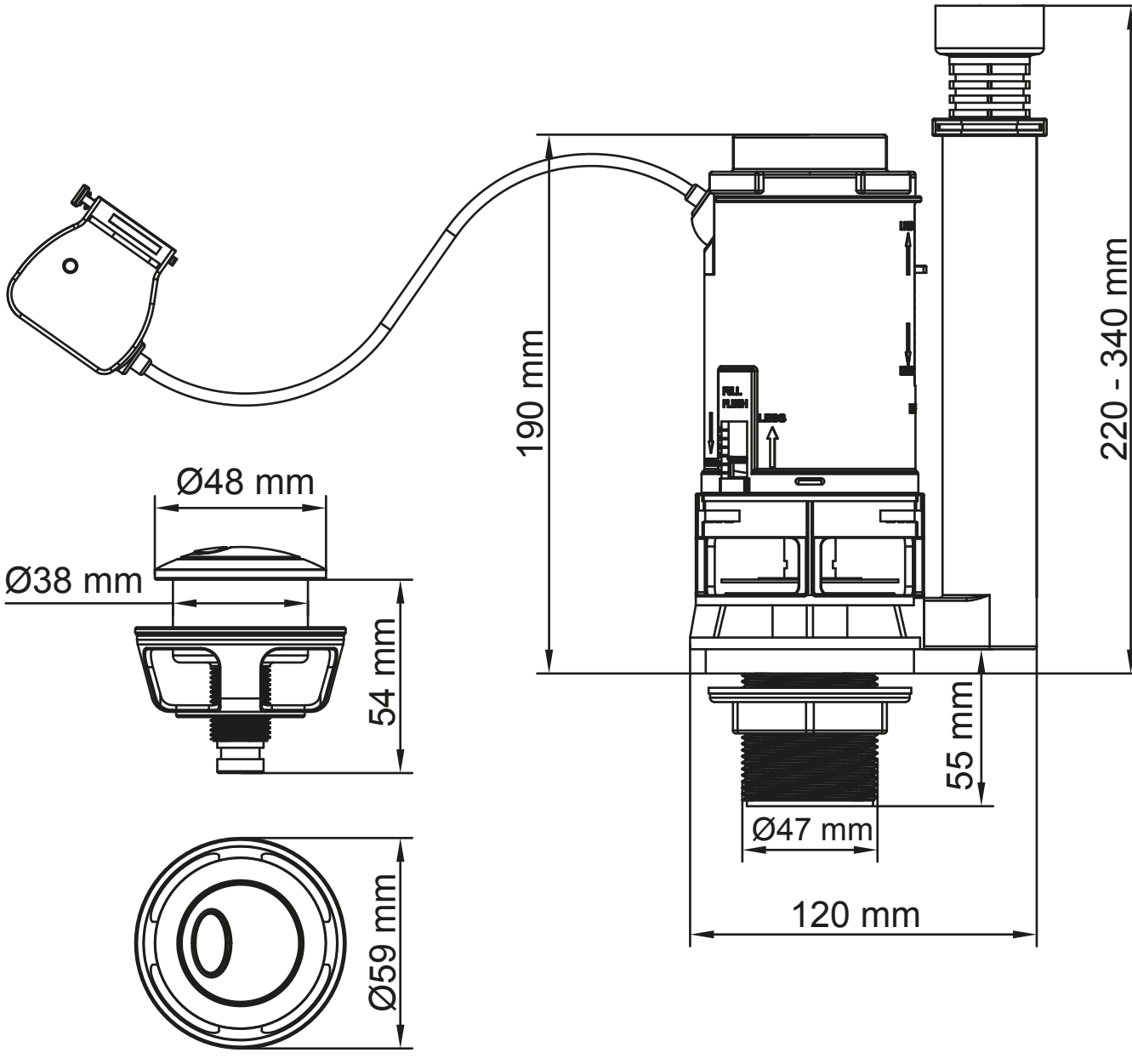
Ø48 mm
Ø38 mm
54 mm
Ø59 mm
190 mm
FULL FLUSH
LESS
220 - 340 mm
55 mm
Ø47 mm
120 mm