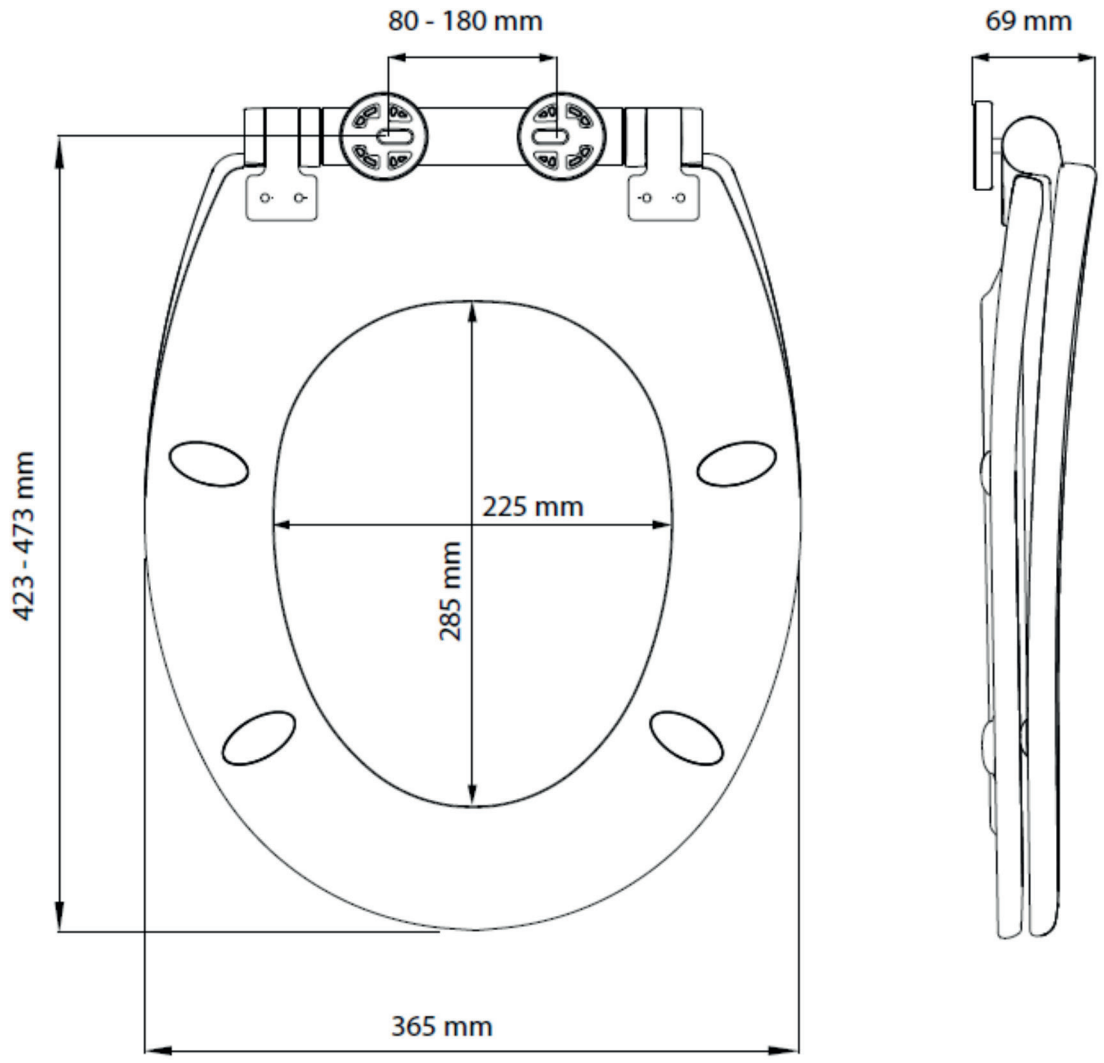
80 - 180 mm
69 mm
423 - 473 mm
225 mm
285 mm
365 mm