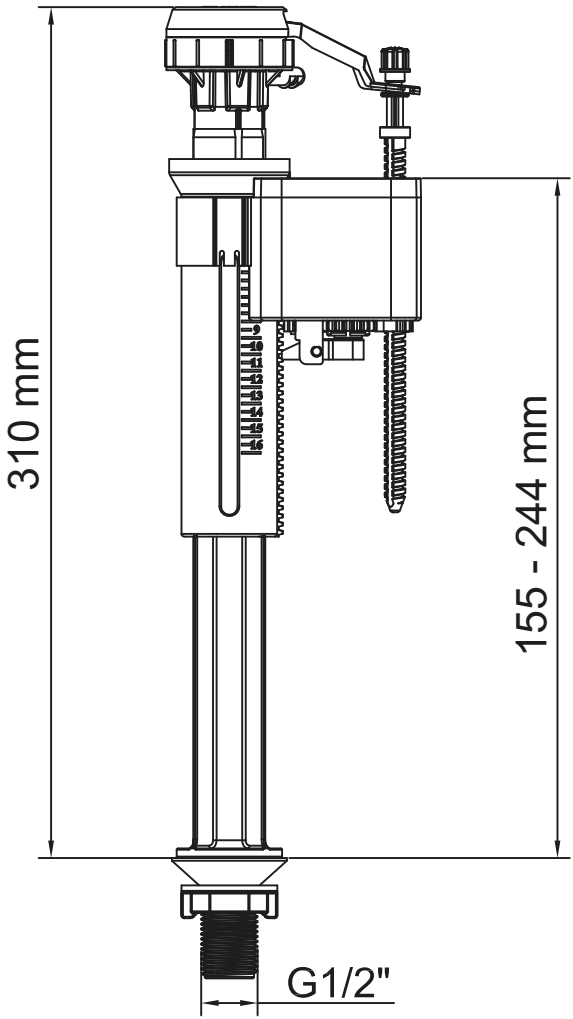
310 mm
155 - 244 mm
G1/2"

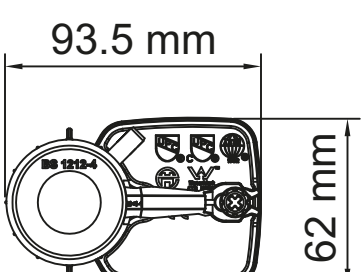
93.5 mm
62 mm
BS 1212-4